ARBOS

USE AND MAINTENANCE HANDBOOK

UNICA

SUPER - SUPER-L

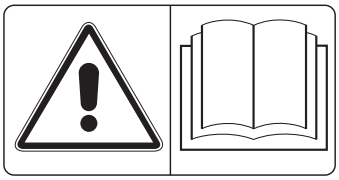

Codice 58310311
Rev.00

CE

Matermacc S.p.A.
Via Gemona, 18 - 33078 San Vito al Tagliamento
(PN) ITALIA
Phone + 39 0434 85267 Fax.+ 39 0434 85517

Index

1. IDENTIFICATION OF THE MACHINE 03
1.1. IDENTIFICATION DATA 04
1.2. INFORMATION ON MACHINE 04
1.3. DATI TECNICI 05
1.4. STORAGE 06
1.5. FIRST USE OR RESTART AFTER A LONG PERIOD OF INACTIVITY 06
1.6. SCRAPPING 06
1.7. AFETY AND ACCIDENT-PREVENTION RULES 07
1.8. SAFETY SIGNS 09
1.8.1. POSITION OF THE PICTOGRAMS 09
1.8.2. DESCRIPTION OF THE PICTOGRAMS 10
1.9. MOVEMENT AND TRANSPORT 11

2. DRIVING ON A PUBLIC STREET 13

3. FUNCTIONING OF THE MACHINE 15
3.1. CONTROLS 15
3.2. VISIBILITY 15

4. USE OF MACHINE 15
4.1. CONNECTION OF MACHINE TO THE TRACTOR 15
4.1.1. FITTING THE UNICA SUPER - SUPER-L TRANSPORTATION TROLLEY 17
4.2. FITTING THE TOWBAR FOR TRANSPORTING THE UNICA SUPER ON ROADS 18
4.3. FITTING THE TOWBAR FOR TRANSPORTING THE UNICA SUPER-L ON ROADS 18
4.3.1. ATTACHING THE MACHINE FOR TRANSPORTING THE UNICA SUPER / SUPER-L ON ROADS 19

5. REGULATION 21
5.1. ADJUSTMENT OF THE WORKING DEPTH 21
5.2. DEVICE TO MAKE THE ELEMENT HEAVIER 21
5.3. DEVICE TO CUT OFF THE ELEMENT 22
5.4. VARIOVOLUMEX 23

6. MAINTENANCE 27
6.1. MAINTENANCE INTERVENTIONS THATMAY BE CARRIED OUT BY THE OPERATOR 27
6.2. GREASING 28
6.3. FINTERVENTIONS FREQUENCY 28
6.4. SPARE PARTS 29

INTRODUCTION

This manual contains the description of the functioning and the instructions necessary in order to execute the main operations of use, the ordinary and periodic maintenance of the machine correctly.

This handbook is subdivided in chapters that are easily identifiable and consultable.

The indications contained in this handbook are intended for a professional user, who must have specific knowledge of the modalities of use of the machine, must be an authorized person, instructed and opportunely trained.

The use of original accessories and spare parts is recommended. Besides losing the warranty the use of non original spare parts could cause danger and reduce the duration and the performances of the machine.

In case of cession or sale this handbook must be always delivered with to the machine. If damaged or lost a new copy must be requested to the machine Manufacturer or previous owner. The handbook is considered an integrating part of the machine.

COPYRIGHTS

The copyright of this handbook belong to the machine's Manufacturer. This handbook contains texts, drawings and illustration that are technical and cannot be disclosed or transmitted to third parties, in whole or partially, without prior written authorization by the machine's Manufacturer.

INFORMATION ON THE HANDBOOK

This handbook is to be considered and integrating part of the machine and must accompany it if it is resold and until it is demolished.

In case of loss or damaging of this handbook request a new copy to the manufacturing company (insert Manufacture's name, address and telephone number) or to the Retailer (insert Retailer's name, address and telephone number).

The specific pictograms are inserted on the machine and the operator must ensure that they are kept in perfect state and replaced when illegible.

The presence of this symbol indicates that it is necessary to pay the maximum attention to the topic that is dealt.

The CE Declaration of Conformity is attached to this handbook (if the machine is CE branded).

It is possible that some devices described in the handbook are not present on Your machine, due to the chosen preparation and the market for which the machine is intended.

HANDBOOK UPDATING

The information, descriptions and illustrations in this handbook reflect the state of the machine at the moment of commercialization of the machine.
The Constructor reserves the right to make change, at any time, to the machines for commercial or technical reasons. These alterations do not obligate the Manufacturer to intervene on commercial vehicles sold up to that moment nor to consider this handbook an inadequate publication.
Any integration that the Manufacturer considers opportune to make later will have to be preserved together with this handbook and considered as an integrating part of it.

WARRANTY

- Verify on delivery that the equipment has not been damaged during the transport and that the accessories are integral and complete.
- Any claims must be made in writing within 8 days from reception.
- The warranty against any defect of the materials is valid one year from the delivery date of the machine.
- The warranty does not include shipment expenses (the material travels at risk and danger of the addressee).
- Any damage caused to people or things are excluded from the warranty.
- The warranty is limited to the repair or free replacement of the faulty piece.
- The retailers and the users are not entitled to any indemnification from the manufacturer for any damages (costs for work, transport, defective job, direct or indirect incidents, no profit on harvests, etc).

WARRANTY DECLINE

- Besides what is reported in the supply contract the warranty declines:
- In case the limits referred to in the technical data table or in other tables in the handbook are exceeded.
- In case the instructions described in this handbook have not been followed carefully.
- In case of wrong use, faulty maintenance or mistakes made by the client.
- In case of non original spare parts.
- The contractual guarantee is not applied if the cited conditions are not respected even only partially.
- The use of spare parts not approved by the Manufacturer invalidates every guarantee and releases the Manufacturer of Retailer from every liability due to malfunctioning or incidents.
- The removal or modification of the shelters and protections releases the Manufacturer from every liability due to damages to things and/or people.
- However, the Manufacturing Company is available to assure an immediate and accurate technical attendance and all that can be necessary for the better functioning maximum production of the equipment.

1. IDENTIFICATION OF THE MACHINE

UNICA SUPER

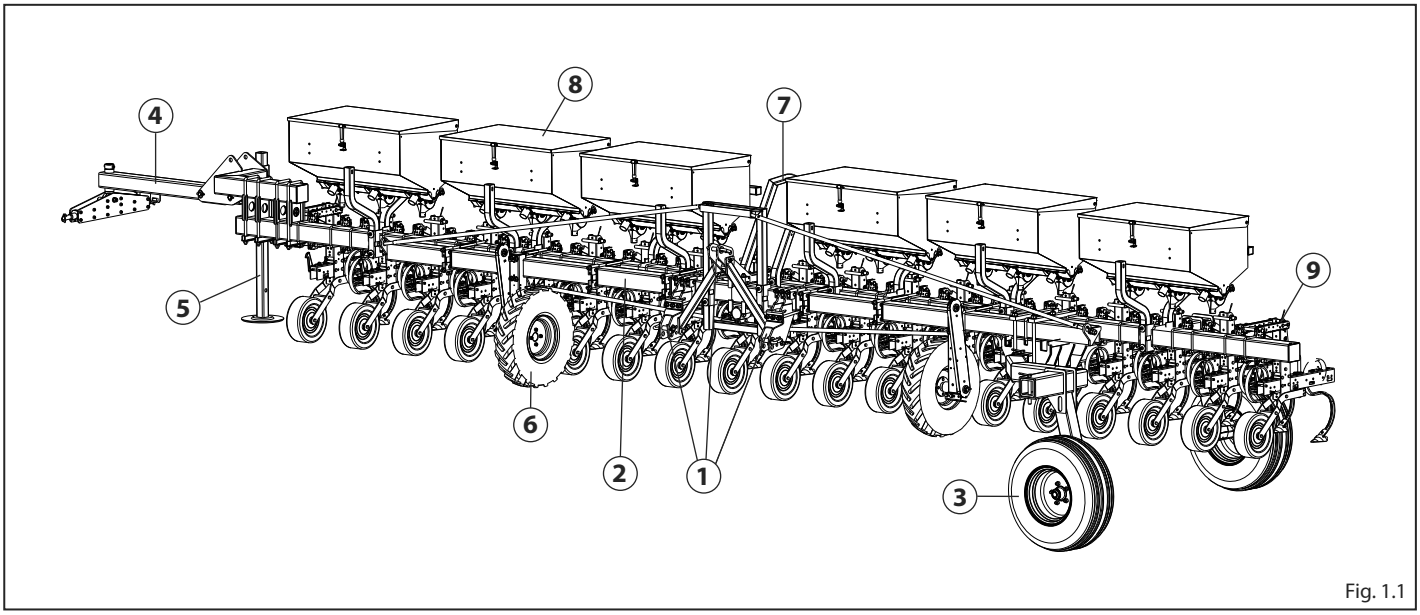

Fig. 1.1

1) = 3 point hitch Cat. II
2) = Main frame
3) = Transportation wheels for road transport (optional)
4) = Towbar for road transport (optional)
5) = Parking support
6) = Wheel supports with transmission
7) = Lifting attachment
8) = Fertilizer distribution tanks
9)= Hoeing element

UNICA SUPER-L

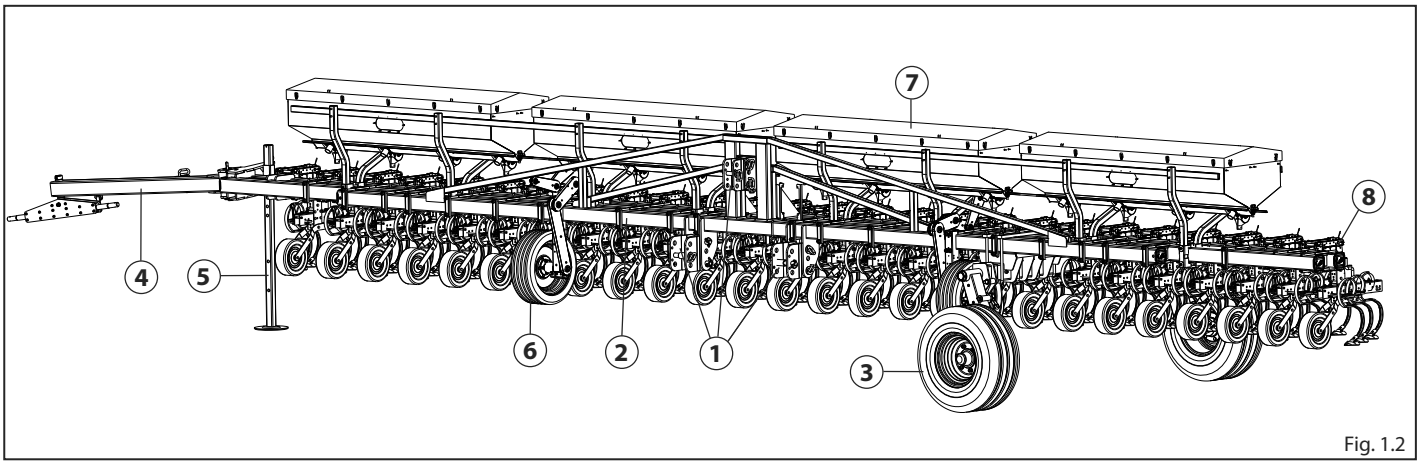

Fig. 1.2

1) = 3 point hitch Cat. II
2) = Main frame
3) = Transportation wheels for road transport (optional)
4) = Towbar for road transport (optional)
5) = Parking support
6) = Wheel supports with transmission
7) = Fertilizer distribution tanks
8)= Hoeing element

1.1. IDENTIFICATION DATA

Every single machine is equipped with an identification plate (Fig. 1.2), containing the following data:

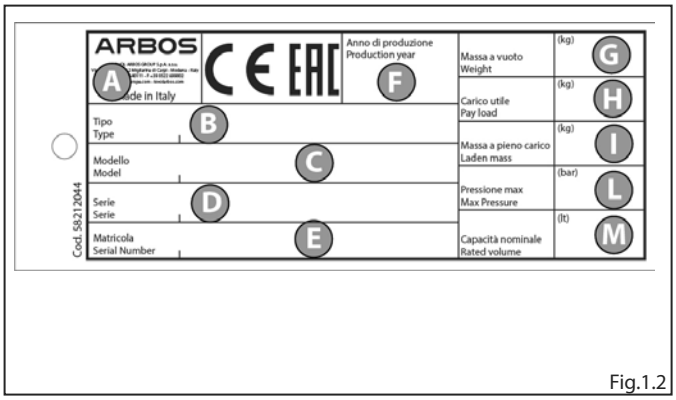

Fig.1.2

A) Name, company name and address of the manufacturer.
B) Machine type
C) Machine model
D) Machine serial number
E) Serial number
F) Year: Year of manufacture of the machine
G) Unloaded weight: weight of the machine unloaded and fully kitted out.
H) Payload: weight of the machine fully kitted out and with the tank full.
I) Permitted loaded weight: total weight of the machine with the tank full.
L) Maximum pressure: maximum pressure of the spray system, expressed in bars.
M) Nominal capacity of the tank: expressed in litres.

1.2. INFORMATION ON MACHINE

The machine can operate only by means of tractor supplied with a lifting group and a universal three-points connection.

Besides operating in all the most common inter-rows, personalized work configurations are available upon request.

The amounts to distribute are regulated through a gear that derives its motion from the movement of the wheel by traction.

This agricultural equipment can operate through a cardan shaft or hydraulic power take-off (optional) applied to the power take-off of an agricultural tractor.

The machine has been planned and built in order to operate in open air, so the performances are not conditioned by atmospheric agents.

ATTENTION

Every use of the machine different from that indicated above is to be considered non-authorized and dangerous..

1.3. DATI TECNICI

Hereafter the data related to the various models of UNICA SUPER - SUPER-L.

MODEL	N° of rows	Row spacing	Working width	Transportation Width	Weight		Power Required	Capacity Fertil.	Wheels
					base	fertil.			
		(cm)	(cm)	(cm)	(Kg)		(Hp)		
SUPER	12	70-75	940	300	1040	1340	120-150	1290	200/60-14.5
	18	45	940	300	1280	1590	120-150	1290	

MODEL	N° of rows	Row spacing	Working width	Transportation Width	Weight		Power Required	Capacity Fertil.	Wheels
					base	fertil.			
		(cm)	(cm)	(cm)	(Kg)		(Hp)		
SUPER-L	12	90	1150	300	1780	2170	150-180		
	16	70	1150	300	1980	2350	120-150	2400	200/60-14.5
	24	45	1150	300	2380	2760	120-150	2400	

The technical data will not be binding on Arbos group S.p.A. We reserve the right to modify them without any prior notice.

1.4. STORAGE

If the machine is stopped for long periods, it is necessary to store it in a place protected from atmospheric agents and protect it in order to avoid damaging.
Before storage it is advised to clean all the machine carefully and lubricate all the mechanical units adequately in order to protect it from rust.
Verify that the storage temperature is comprised between 0 °C and 50 °C.
Before stopping the machine for long periods, it is opportune to operate as follows:

- **wash the equipment with abundant water, in particular the chemical substances tanks, then dry it;**
- **check it carefully and replace any damaged or worn parts;**
- **grease all the mechanical units, the blocking hinges;**
- **grease the transmission chains, grease all the transmission chains, use a lubricant over all the non painted parts;**
- **keep the machine in a sheltered area, if possible, on a flat a strong surface;**
- **verify the correct blocking of all nuts and bolts;**
- **protect the equipment with a cloth;**

1.5. FIRST USE OR RESTART AFTER A LONG PERIOD OF INACTIVITY

Before using the machine for the first time or after along period of inactivity, it is necessary to carry out what follows:

- **verify that the machine has no damaging;**
- **verify the mechanical units that must be in good state and not rusted;**
- **verify the correct functioning of the light bars (if present);**
- **grease carefully all the mobile parts;**
- **verify that not there are leakages of oil coming from connections or pipings;**
- **verify that all the protections are placed correctly;**

1.6. SCRAPPING

In case of scrapping, the machine will have to be disposed in specific rubbish dumps, in keeping with the enforced legislation.
Before proceeding to the scrapping, it is necessary to separate the plastic or rubber parts.
Recuperate any exhausted oils and dispose them in the appropriate collection centres.

The used oil must be opportunely recuperated and not dispersed in the environment as according to the enforced norms it is classified like dangerous waste and as such it must be sent to the specific collection centres.

For the collection of exhausted oils, it is obligatory to refer to the "**Obligatory Consortium of Used Oils**".

The parts made up only from plastic material, aluminum, steel, can only be recycled, if collected in the specific centres.

1.7. AFETY AND ACCIDENT-PREVENTION RULES

Correct use of the appliance, careful attention paid to the rules listed below and strict application of all precautions to prevent any dangerous of accidents or hazards, will ensure better long-term operation of the appliance and will reduce the likelihood of faults.

Arbos group S.p.A. declines any responsibility, objective or subjective, where the rules governing behaviour as provided in this manual, are disregarded.

- The machine is not recommended for use in fields other than the agriculture sector.
- The machine must be used by a single operator driving the tractor.
- Any use which differs from the one specified is considered improper.
- The machine must only be used by authorised, instructed and properly trained personnel. The assigned operator, in addition to having read the instructions provided in this manual, must undergo adequate training on the use of the machine and must have a valid driving licence. The operator must contact the manufacturer should they have any doubts on the use of the machine with or understanding the present manual.
- The manual must be kept somewhere so that it is accessible and close to hand, so that the operator can consult it at any time, where necessary. If the manual is misplaced or damaged, contact the Arbos group S.p.A. Company for a replacement copy.
- The operator must ensure that during operation, no persons or animals are found in close proximity of the machine. Never operate the machine near persons stopped or in transit within the machine operating area.
- Do not use the machine if suffering from fatigue, illness or under the effects of alcohol, prescribed medication or drugs.
- This machine is only used during the day. If there is an exceptional requirement to use the machine at night or in conditions of reduced visibility, the lighting system provided with the tractor, or an auxiliary lighting system, must be used.
- Any arbitrary modification made to the machine releases Arbos group S.p.A. from all liability for damages or injuries which may be experienced by operators, third parties and objects.
- Before you switch the machine on, check it every time.
- Arbos group S.p.A. cannot list every improper use which may reasonably lead to a potential hazard.
- The labels applied to the machine provide important instructions: please observe them to ensure your safety.
- Make sure that the emergency pictograms are legible. Clean them and replace them, when necessary, with new labels.
- Before using the machine, ensure that all safety devices are in the correct place and in good condition; where they are faulty or damaged, immediately replace them.
- Before descending from the tractor and before every maintenance operation, activate the stationing parking brake, turn the engine off, remove the ignition key from the dashboard and take care of it.
- Personnel must use the safety provisions and personal protection equipment when using or carrying out maintenance of the machine.
- We recommend that operators of the machine do not wear items of clothing which may become tangled in the machine

Fig1.4

- During use, the machine may emit dust. It is advised to verify the filters on the cabin ventilation system periodically or use suitable protection systems for the respiratory tracts such as anti-dust masks.
- During use, the operator must have sufficient visibility on working areas considered as dangerous, therefore the mirrors supplied on the tractor must be kept clean and in a perfect state.
- The machine must not be left unsupervised when the tractor engine is on.
- Keep the machine clean from foreign material (detritus, tools, various objects), that could damage the functioning or cause damage to the operator.
- Avoid using it on muddy or soft ground.
- Check the wear of the hydraulic tubes. Replace them if deteriorated.
- Do not use the controls or flexible tubes as handles; these components are mobile and do not offer stable support.
- Any modifications to the machine may raise safety concerns. In such an instance, the operator will be wholly responsible for any incidents.

- It is strictly forbidden to remove or tamper with safety devices.
- Check that the emergency pictograms are in a good condition. If the pictograms are deteriorated they must be replaced with other original ones requested from the manufacturer and placed in the position indicated in the use and maintenance handbook.
- Pay attention to the risk of unintentional contact of the sowing machine's arms with high voltage cable.
- Never use the machine to transport people, animals or objects.
- Attach the machine, as provided, to a tractor that has a suitable power and configuration by means of the appropriate device (lifter), in compliance with the norms.
- The attachment pins category of the equipment must correspond to that of the lifter attachment.
- Pay attention when operating in areas with the arms lifted.
- Attach the machine, as provided, to a tractor that has a suitable power and configuration by means of the appropriate device (lifter), in compliance with the norms.
- Pay the maximum attention during the equipment coupling and uncoupling phases.
- It is absolutely prohibited to stand between the all-purpose tractor and the attachment to manoeuvre the lifting control from outside.
- Do not remove the protection grid inside the loading hopper, in order to avoid risks of possible contacts with mobile elements.
- The application of an additional equipment to the tractor involves a different distribution of the masses on the axles. Therefore it is advisable to add suitable ballasts to the front part of the all-purpose tractor in order to balance the masses on the axles.
- Respect the maximum mass provided for the axles, the mobile mass, the regulation on the transport and the street code.

1.8. SAFETY SIGNS

Check that the emergency pictograms are in a good condition. If the pictograms are deteriorated, they must be replaced with other original ones requested to the manufacturer and placed in the position indicated in the use and maintenance handbook. Make sure that the emergency pictograms are readable. Clean them using a cloth, water and soap.

1.8.1. POSITION OF THE PICTOGRAMS

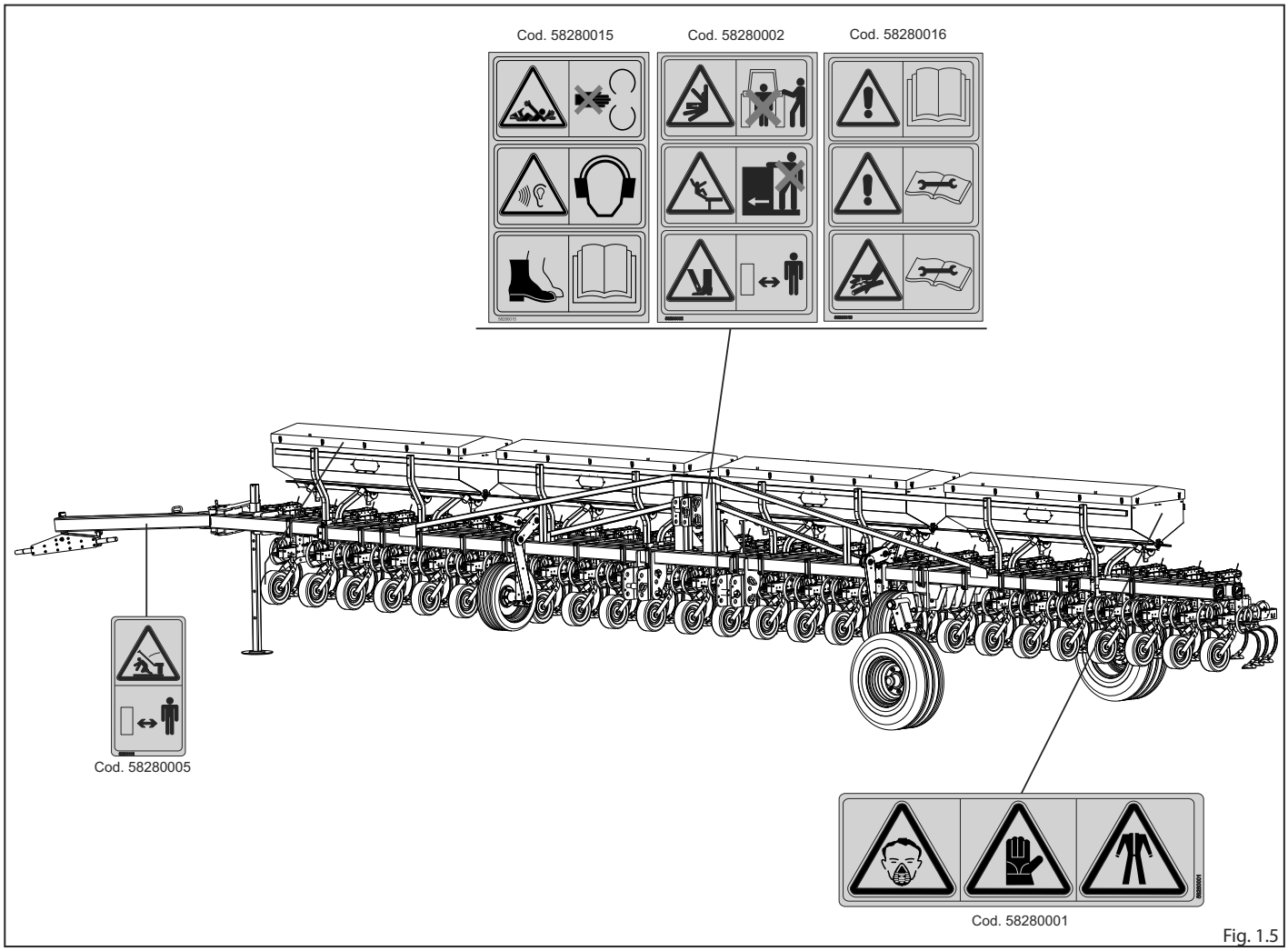

Fig. 1.5

1.8.2. DESCRIPTION OF THE PICTOGRAMS

CAUTION The regulation and maintenance operations must be carried out after reading the use and maintenance handbook, with the machine switched off and the ignition key removed.	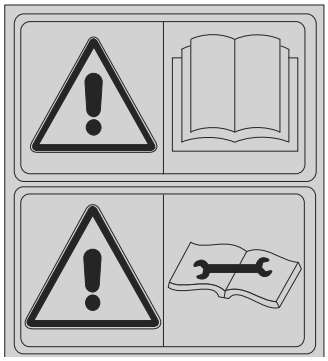
CAUTION -DANGER Of fluids under pressure. Read the handbook before intervening and consult a doctor in case of wounds.	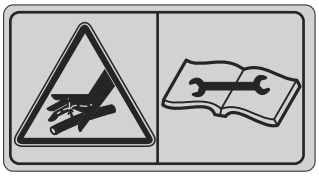
C A U T I O N - D A N G E R of crushing. Do not stop between the tractor and the machine.	
CAUTION - DANGER of crushing. Do not stop between the tractor and the machine.	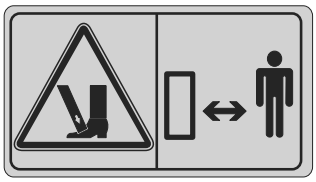
CAUTION - DANGER of chopping hands.	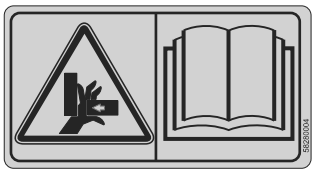
CAUTION Do not climb up or be transported by the machine.	
CAUTION Kinematic mechanisms in movement.. If you approach the machine without the due precautions there is a high risk of accident.	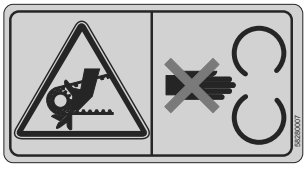
CAUTION - DANGER of catching and dragging. Do not put your hands near the driving shaft in motion	

CAUTION - DANGER of toxic substances.	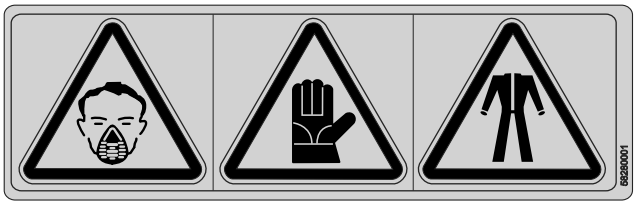
CAUTION - DANGER of suspended parts falling.	
LIFTING POINT	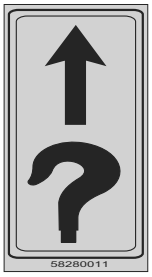
GREASING POINTS	

1.9. MOVEMENT AND TRANSPORT

Pay the maximum attention to safety during the loading and unloading operations that have to be carried out by qualified staff (people assigned to slinging operations and to the carriage, etc.).
In case of lifting the machine, it is obligatory to use the appropriate lifting points indicated by the pictograms.

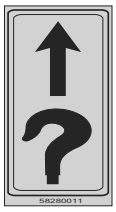

A motor vehicle with suitable power and dimensions must be used for the transport of the machine, opportunely predisposed.

Once loaded, the machine must be fixed using anchorage ropes.

2. DRIVING ON A PUBLIC STREET

	If it is required to drive on a public street, it is mandatory to strictly respect the Driving Code paying particular attention to the speed. **When driving on the street it is fundamental to respect the driving code of the residing Country.** **Any accessory used for the transportation must be equipped with specific signals and adequate protections.**

- Before starting to drive, install optional lights.
- It is mandatory to equip the machine with a yellow or orange flashing light.
- Before starting to drive on a public street from a non-paved or dirty surface, it is required to clean the wheels of the tractor carefully from any presence of mud.
- When driving on a public street, the machine must be in the transport position and the power socket of the tractor must be unplugged.
- The weight of the machine modifies the stability of the combination tractor-sower, influencing the steering ability as well as the breaking ability, it is thus important to proceed with a moderate speed.
- In particular, always remember that the front shaft must always be loaded with a weight equal to 20% of the combination tractor-sower.
- Verify the lifting ability and the stability of the tractor through the following formula and, if needed, apply the ballasts.

$$I_{F,min} = \frac{(I_R \times (c + d)) - (T_F \times b) + (0{,}2 \times T_E \times b)}{a + d}$$

Please Note: in the present calculation the accessories mounted on the rear and the combinations front/rear have been taken into consideration.

Example of instructions for the stability of the combination tractor-sower.

Legend:	
TE [kg] Weight of unloaded sowing machine.	①
TF [kg] Load on the front shaft of the unloaded tractor.	①
TR [kg] Load on the rear shaft of the unloaded tractor.	①
IR [kg] Combined weight of the equipment carried on the rear/rear ballast.	②
IF [kg] Combined weight of the equipment carried on the front/front ballast.	②
a [m] Distance between the centre of gravity of the combined equipment carried on the front/fron ballast and the centre of the front shaft. **b [m]** Tractor's wheelbase.	② ③
c [m] Distance between the rear shaft centre and the centre of the lower connection points.	① ③
d [m] Distance between the centre of the lower connection points and the centre of gravity of the combination of the equipment carried on the rear/rear Ballast.	① ③

①	See the instruction manual of the tractor.
②	See the instruction manual of the equipment.
③	To measure.

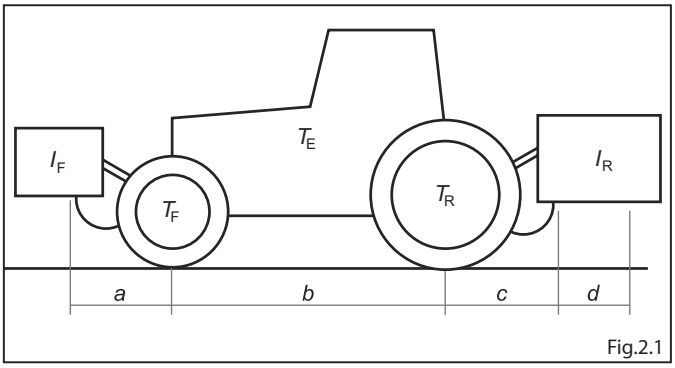

Fig.2.1

- It is very important to remember that the road-holding and the steering and breaking abilities may be influenced, even heavily, from the presence of the of any equipment or bear that is being carried.

- On bends, particular attention must be paid to the centrifugal force on the machine with or without the carried equipment, especially on sloping streets or grounds.

- For the transportation, set and fix the chains of the lifting side arms of the tractor; verify that the lids of the seeds and fertilizer tanks are well sealed; put in block position the lifting lever of the hydraulic lifter.

- All transports on street must be made with empty tanks and with a maximum speed of 25 km/h.

- The transports made outside the working area must be carried out with the equipment in transport position. This also implies that all hydraulic connection must be unplugged from the tractor.

- When the equipment or other bears obstruct the visibility of the lighting disposals or signals, these must be correctly reproduced on the equipment, as regulated in the driving code of the residing Country.

3. FUNCTIONING OF THE MACHINE

	Verify that during the work, all of the machine parts function correctly. Please note that most of the accidents and damages are often caused for not tightening up correctly the fixing parts.

- Since during the first period of the machine's life there is a general settlement of all the mechanical parts and of the hydraulic connections, it is fundamental to carry on the inspections on the machine with the maximum precision.
- Before using the machine, verify that no animals or people are standing in or within the working area.
- It is absolutely prohibited to take off and/or modify the protections on the machine.
- Do not use the machine when ill, tired or under the effect of medications, drugs or alcohol.
- Before using the machine, it is fundamental learning the controls panel and their function.
- While opening or closing the folding frame, do not stand for any reason by the machine.
- The machine must be used by a single operator driving the tractor.

3.1. CONTROLS

All the controls are highlighted by the specific signals indicating their function and explaining through pictorials their actions and positions in the cabin.

3.2. VISIBILITY

Checking of the operation areas is possible through the rear mirrors sited on the tractor and by the sight of the operator.

	WARNING- while driving in reverse gear there may create some shade zones which are not visible through the rear mirrors.

4. USE OF MACHINE

	Before using the machine, it is necessary to familiarize with the controls and its operating abilities.

In every circumstance the body of the operator must be all inside the cabin, in order to reduce the possibility of being exposed to any external dangers.

Before coming down from the tractor and before every operation of maintenance and regulation, action the parking brake, switch the engine off, remove the ignition key from the dashboard and wait for all the mobile elements to stop.

The safety of the operator and the people present around the machine depends on the ability of judgment and caution in using of the machine. Therefore, it is necessary to know the position and the functions of all the controls well).

The machine must be always found in perfect state of operation and must be repaired with replacement parts only originates them.

4.1. CONNECTION OF MACHINE TO THE TRACTOR

The machine must be connected to the tractor with a power take off activated at 500 rpm, with weight and suitable power, in compliance with the enforced requirements in the country in which the machine is uses.

	During the phases of use, regulation, maintenance, repair or movement the operator must use adequate Individual Protection Devices (DPI).

For the coupling of the tractor to the machine, the operator must move the tractor with the reverse gear until it reaches the connections on the machine with the back lifters (Fig. 4.1).

- Action the parking brake of the tractor, switch the engine off, remove the ignition key and step down.
- Insert the hinges and the relative plugs/safety forelocks.
- Connect the third point (tightener) of the machine to the tractor, lift the machine until the power of the machine and tractor are at the same height and register the tightener bringing the machine in the horizontal position.
- Block the lifting bars of the tractors, in order to avoid the machine oscillating laterally, as this compromises the cross-sectional stability of the complex.
-

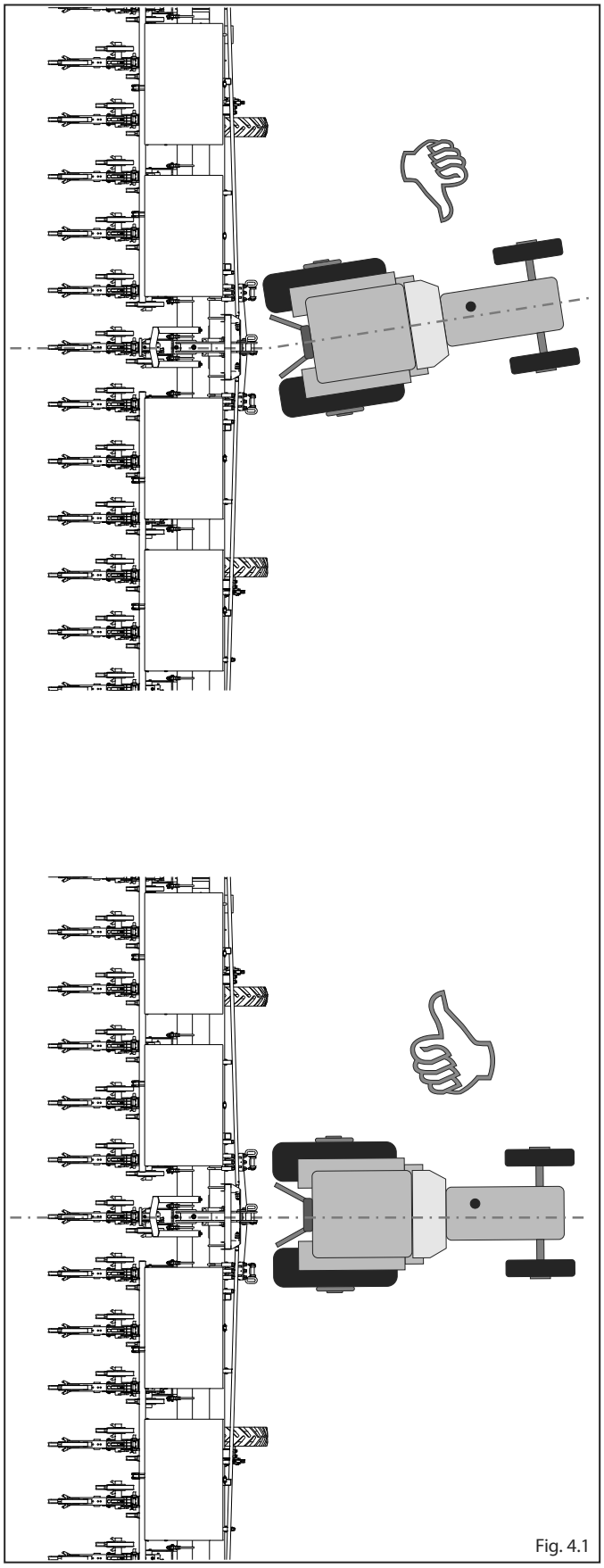

Fig. 4.1

USE OF THE TRANSPORTATION TROLLEY

	Assembly and disassembly operations must be carried out by at least 2 people.

For assembly and disassembly, proceed as follows:
- Attach the machine to the three-points connection of the tractor (see chapter 4.1)
- Park on level ground and make sure that there are no persons or animals near the machine.
- Apply the parking brake.
- Lift the machine.

4.1.1. FITTING THE UNICA SUPER - SUPER-L TRANSPORTATION TROLLEY

- Mount wheel supporting frame **A** by fixing it with pins **1** (Fig. 4.2).
- Mount wheel supports **B-C** by fixing them with pins **2** (Fig. 4.3).
- Mount wheels **D** by blocking them with nuts **3** (Fig. 4.4).

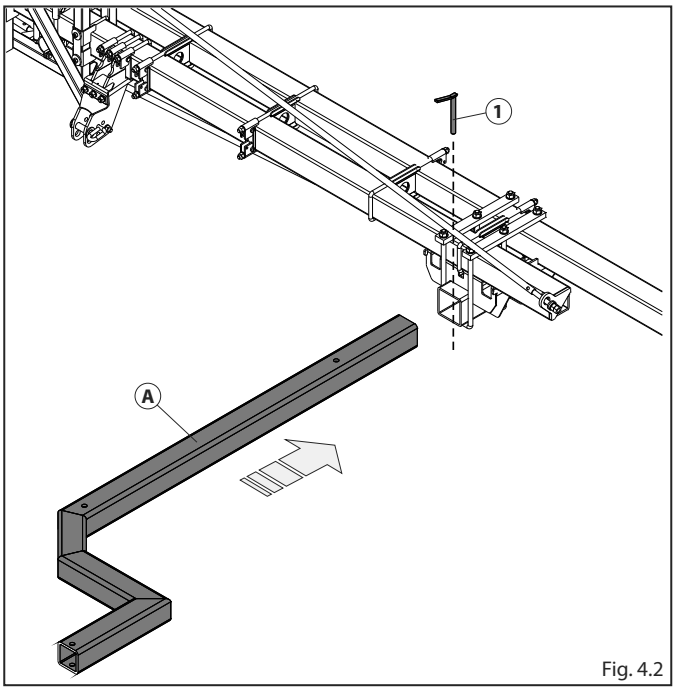

Fig. 4.2

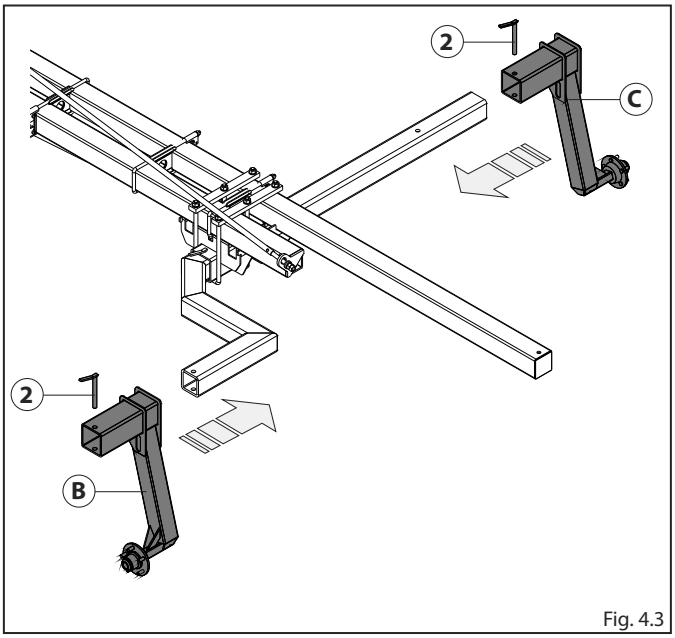

Fig. 4.3

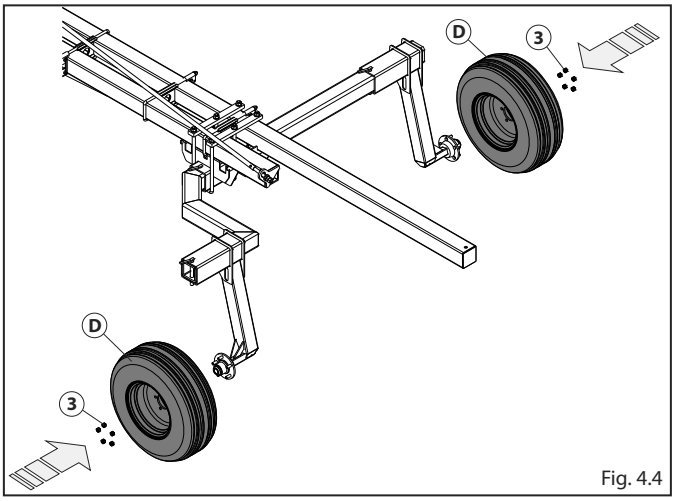

Fig. 4.4

4.2. FITTING THE TOWBAR FOR TRANSPORTING THE UNICA SUPER ON ROADS

- Fit the road transportation tow bar **E** securing it with the pins **4** (Fig. 4.5).
- Fit the support foot **F** securing it with the pins **5** (Fig. 4.6).

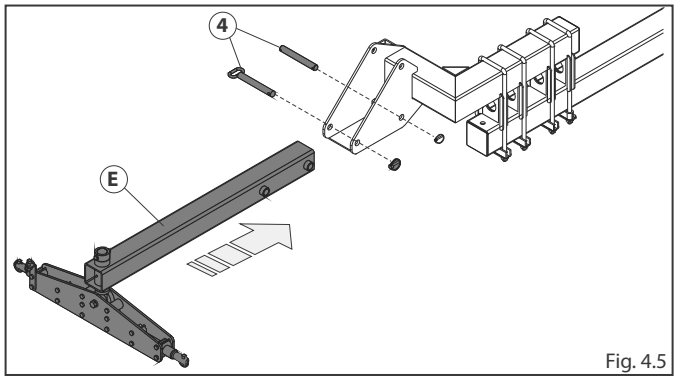

Fig. 4.5

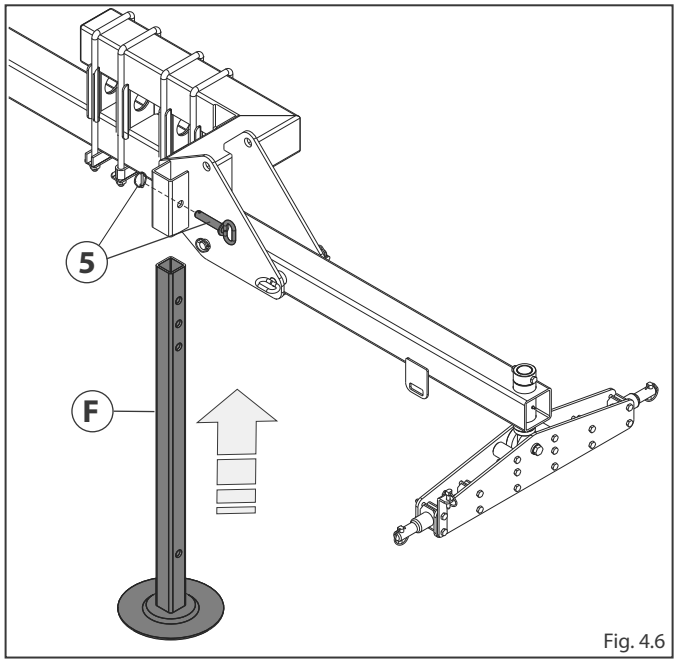

Fig. 4.6

4.3. FITTING THE TOWBAR FOR TRANSPORTING THE UNICA SUPER-L ON ROADS

- Fit the road transportation tow bar **M** onto the frame locking it with the pin **15** (Fig. 4.7).
- Fit the tie rod **N** fixing it with the pins **16** (Fig. 4.8).

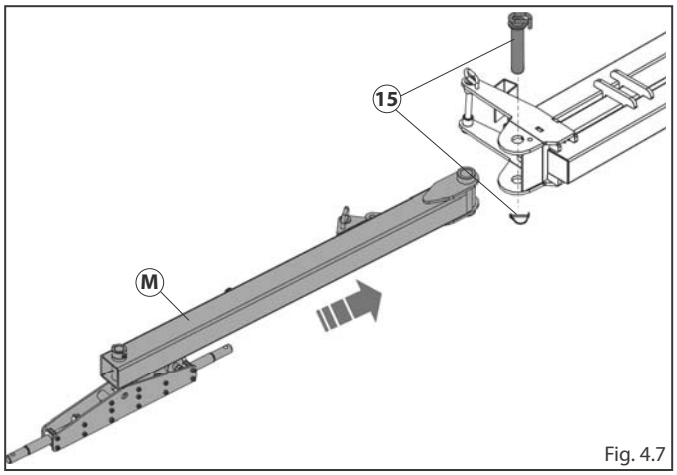

Fig. 4.7

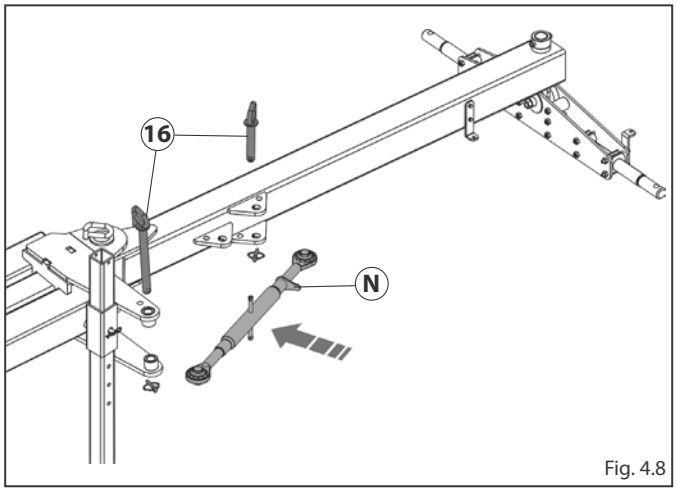

Fig. 4.8

4.3.1. ATTACHING THE MACHINE FOR TRANSPORTING THE UNICA SUPER / SUPER-L ON ROADS

In order to tow the machine for road transportation, the machine must be on solid ground (flat if possible) and be supported by carrying wheels and by the support foot **F.**
After these checks, the machine can be towed to the tractor. To do so, proceed as follows:

- Bring the elements together with the parking device **Q** to the locked position.
- Move the spring **P** from position **1** to position **2** (Fig. 4.9 - 4.10)
- Remove the pins **6** while at the same time supporting the tow bar **E** (Fig. 4.11).
- Bring the tow bar **E** to a horizontal position (Fig.4.11).
- Bring the tow bar **E** to a vertical position in order to hook to the tractor (Fig. 4.12).
- Moving the tractor, approach the tow bar **E** so that the ends of the hoist arms coincide with the tow bar (Fig.4.13).
- Attach the tow bar to the hoist locking it with designated pins.
- Lift the support foot **F** (Fig.4.14).

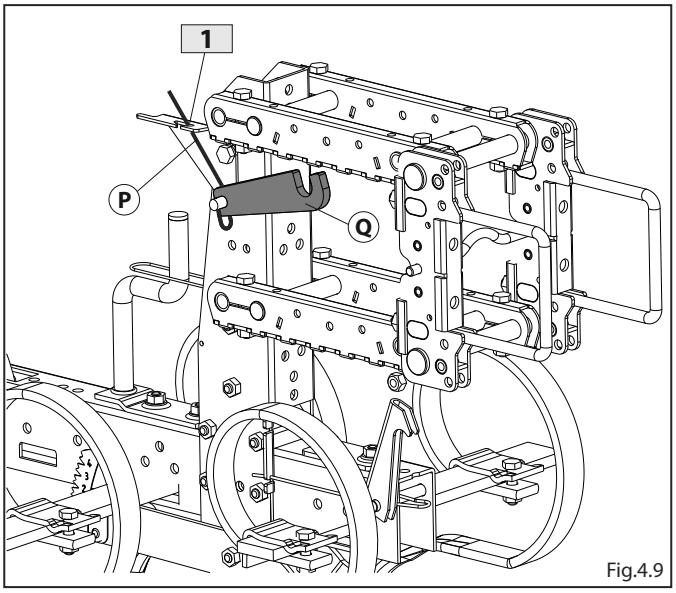

Fig.4.9

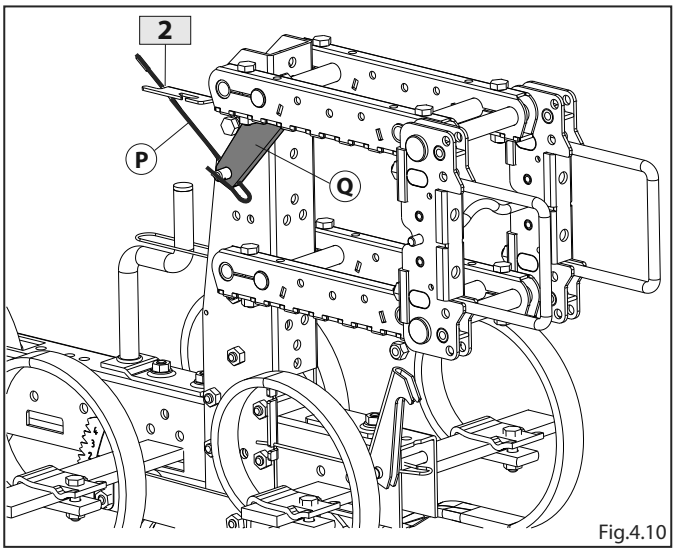

Fig.4.10

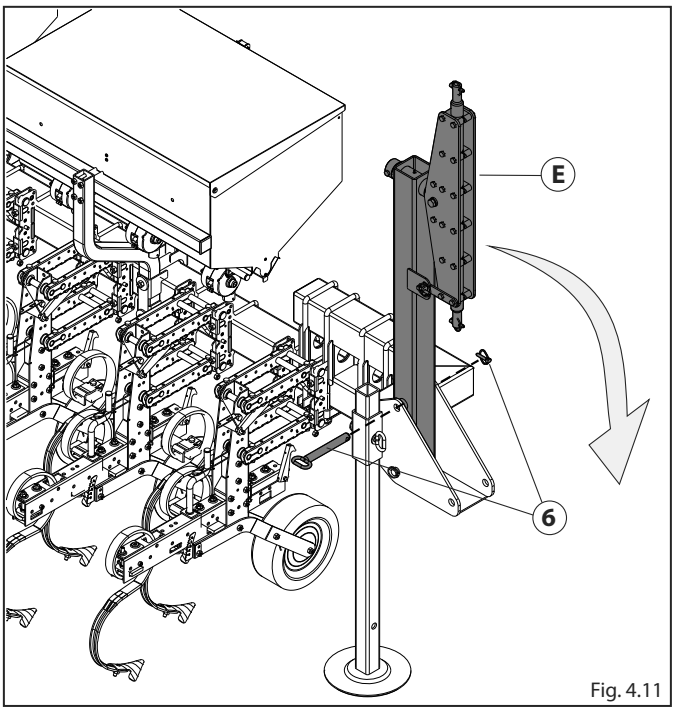

Fig. 4.11

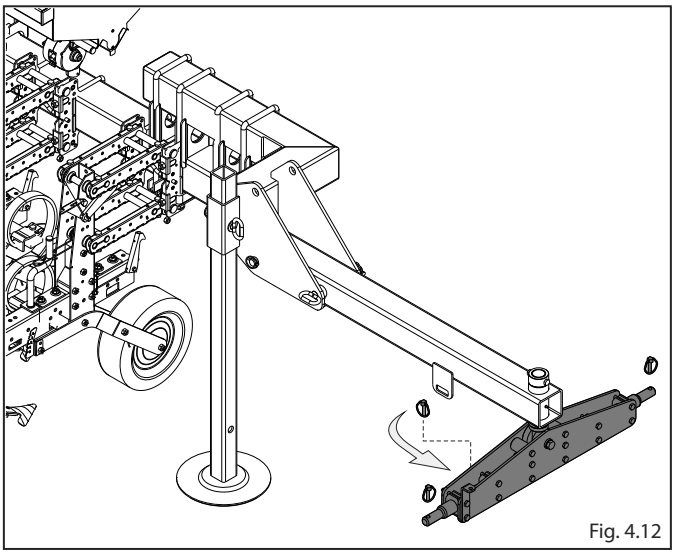
Fig. 4.12

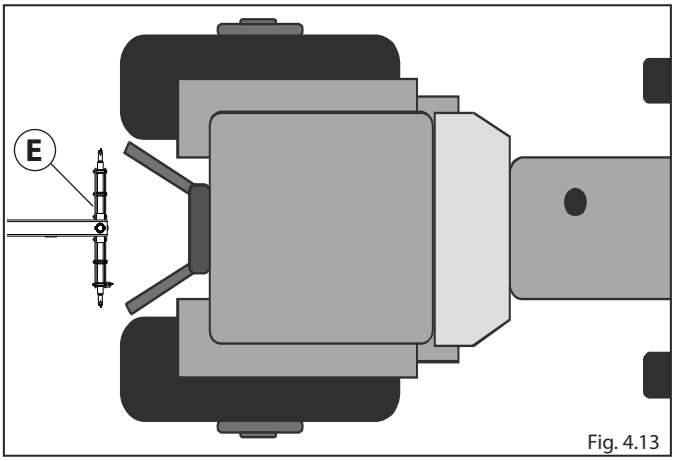

Fig. 4.13

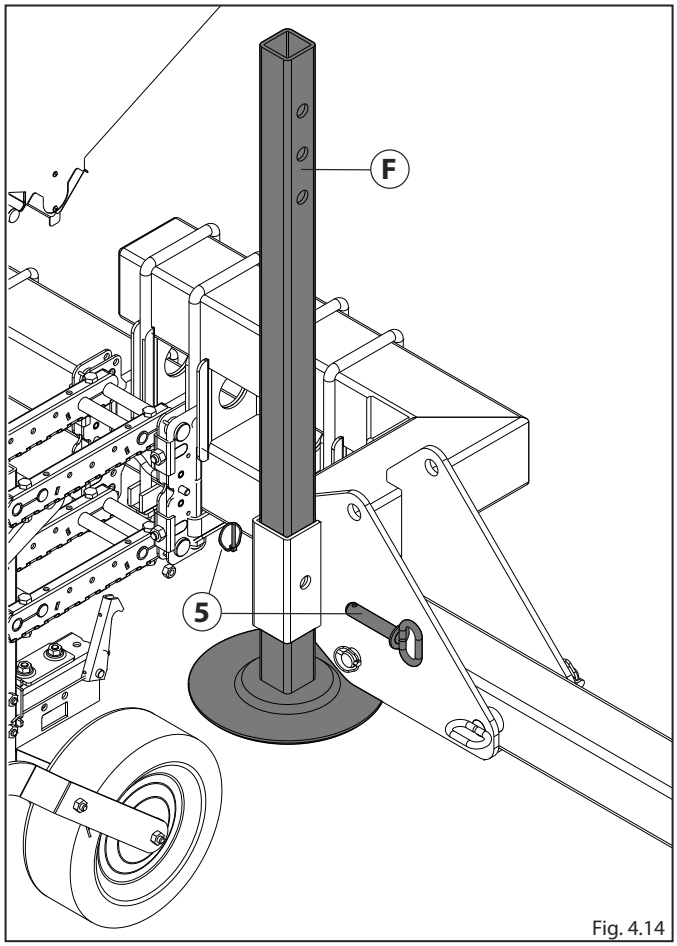

Fig. 4.14

5. REGULATION

5.1. ADJUSTMENT OF THE WORKING DEPTH

The depth adjusting wheel permits to obtain a homogeneous processing depth thanks to its vertical movement.
This adjustment can be made by acting on crank **B**.

To adjust the working depth simply act on the crank as follows:

- Loosen the locking spring **A** and free the crank (Fig.5.1).
- Rotate crank **B** counterclockwise to increase depth and clockwise to reduce it (Fig.5.2).
- Hook the locking spring **A** again;
- Adjust all the elements to the same working depth.

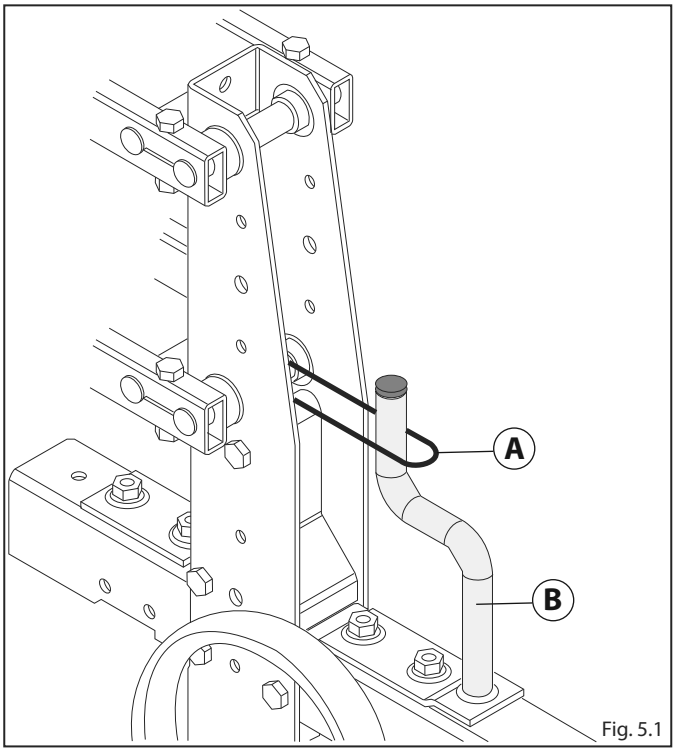

Fig. 5.1

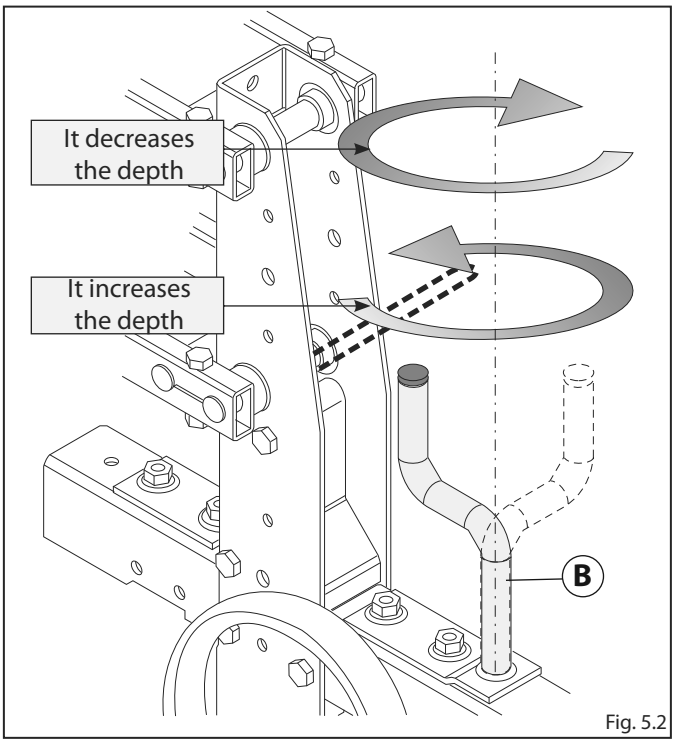

Fig. 5.2

5.2. DEVICE TO MAKE THE ELEMENT HEAVIER

This device, to be used only wherever the characteristics of the ground require it (generally "hard" ground), is used to make the element heavier and increase the impact of the tools on the ground.
The system consists of a spring **M** mounted on the parallelogram (Fig.5.3) , which can be switched in 3 different positions according to the type of ground, namely on:

K1 - K2 for light ground;
K3 - K4 for medium ground;
K4 - K5 for heavy ground;

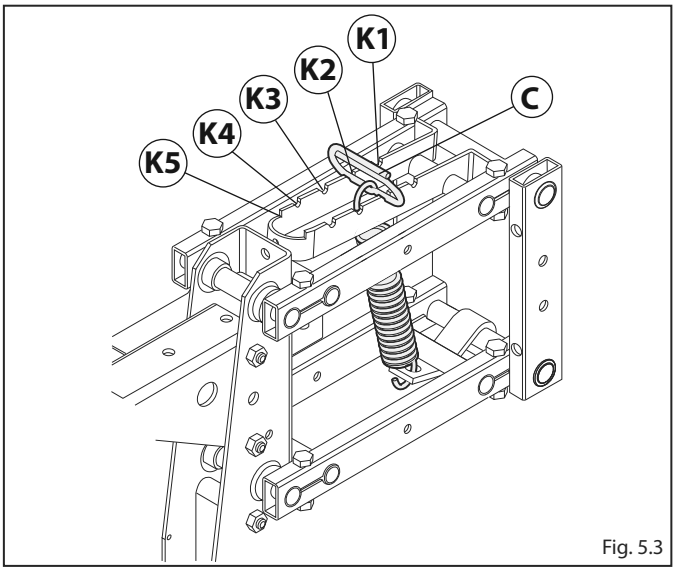

Fig. 5.3

5.3. DEVICE TO CUT OFF THE ELEMENT

Each element is equipped with a hooking system by which the element can be locked in the "high" position (Fig 5.4) This permits to cut off the element quickly (for example at the field edge) or anyway whenever it is necessary to disengage the elements from the ground.
Before starting working make sure all the necessary elements are in their working position.

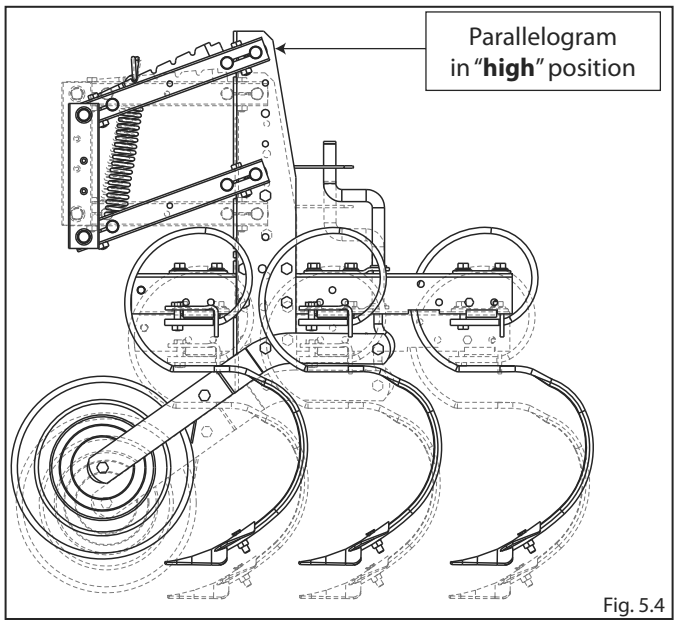

Fig. 5.4

	The strength needed to lift the element is > 80 Kg. Take all necessary measures

To hook the element:

- Take spring **A** to the high position (Fig.5.5);
- Lift the element until you hear or see the hook click in on the locking pin;
- Release the element slowly until it is totally supported by the hook.

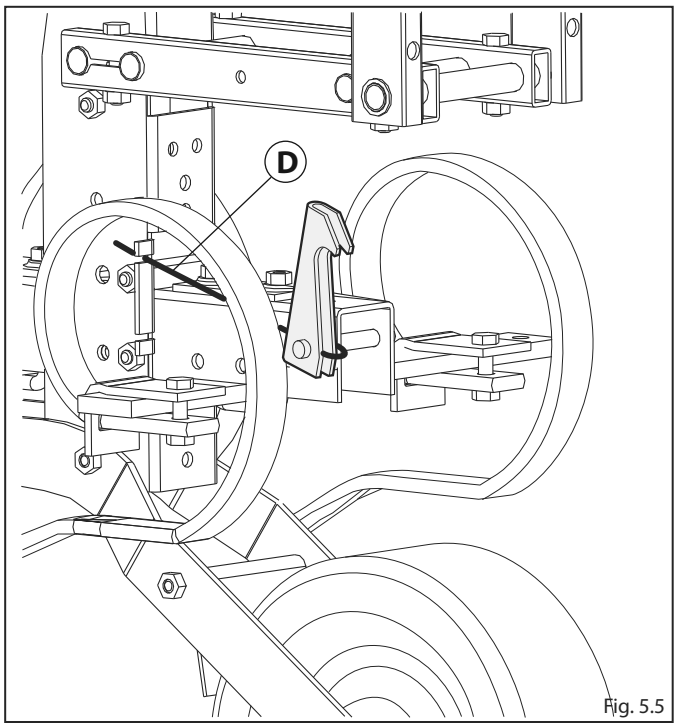

Fig. 5.5

To unhook the element:

- Take spring **A** to the bottom position (Fig.6.6);
- Lift the element until you hear or see the hook click in on the locking pin;
- Release the element slowly until it rests on the ground or at the end of stroke.

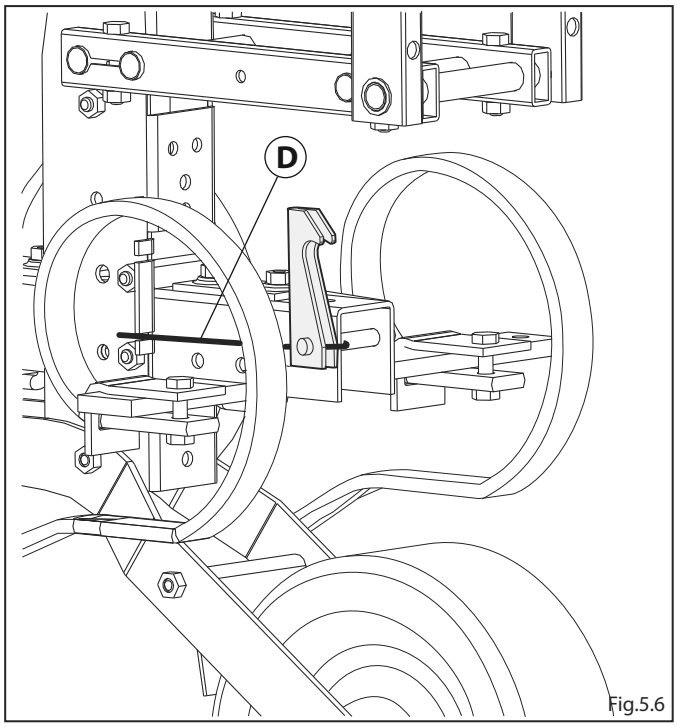

Fig.5.6

5.4. VARIOVOLUMEX

We remind to follow diligently all the information provided by the manufacturers inherent to usage, handling and the transport of the fertilizers.

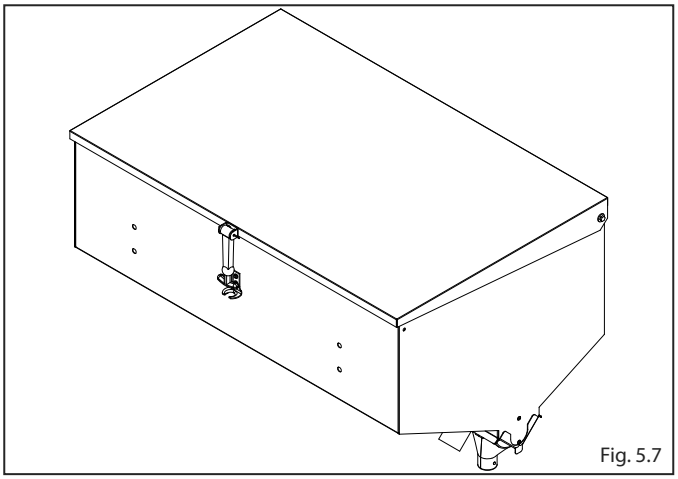

Fig. 5.7

FILLING THE TANKS

I The tanks should be filled once you have reached the field. We recommend you to carry out this operation on flat ground and with no hindrances. Lower the hoist completely and pull the emergency brake of the tractor. Make sure the plug of the discharge hose and the bottom of every distributor is closed, then fill the tanks.

TANK UNLOADING

Once the work has been completed, it is good practice to empty the tanks by moving the mouth of an empty bag to below the tank discharge.

- Press the stop cap **A**.
- Move the discharge cap **B** (Fig. 5.8).

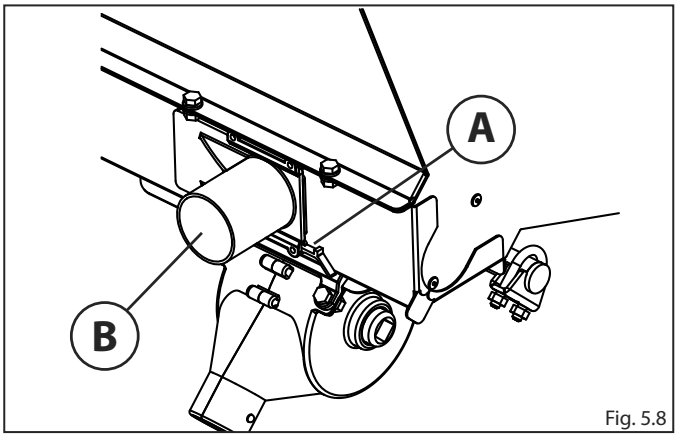

Fig. 5.8

VARIOIVOLUMEX ADJUSTMENT DISTRIBUTOR

The distribution of the fertilizer is made by means of a conveyor belt that is fed by means of two slits with a millimetrically adjustable through the **B** ferrule (Fig.5.9).
Acting on the **B** ferrule the opening/closing of the slit is adjusted therefore it is possible to dose the quantity of fertilizer distributed without having to act on the transmission service.
For example the indications are provided in the Adjustment Table that is placed on all the tanks, with two-figure numbers, where the first figure indicates the value to which the VarioVolumex **A** indicator system must be adjusted, the second indicates instead the value to which the **B** nut must be adjusted.

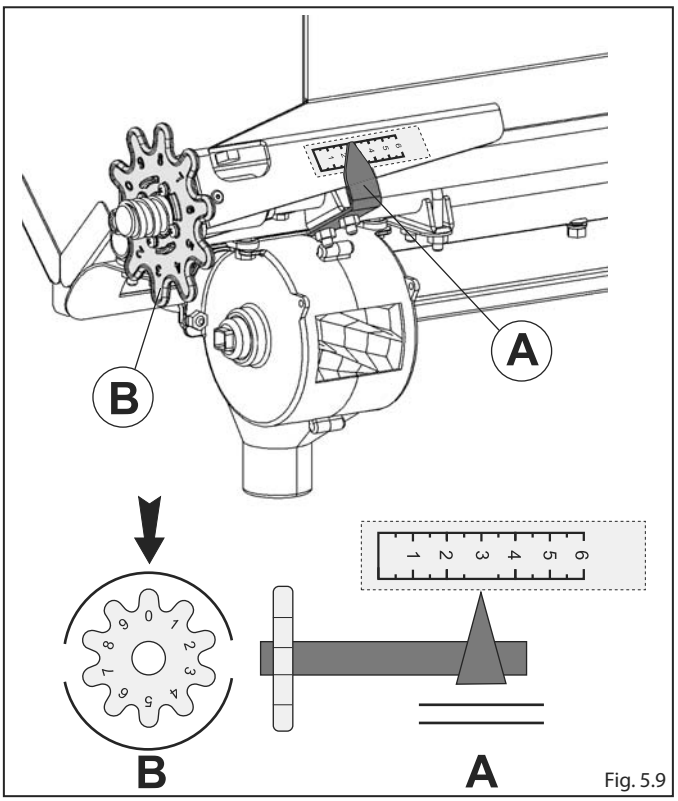

Fig. 5.9

ADJUSTING TABLE VARIOVOLUMEX

The main tank permits to change the sowing parameters (sowing interval) to all sowing devices by changing a single gear.

- The adjustment table related to the adjustment of VARIOVOLUMEX is divided into four parts.
- Every part of the table describes the transmission gear sequence **(A)** set or to be set based upon the actual fertilizer distribution requirements.
- Each table has **3 columns** separated by different specific weights of the fertilizer **(0.8 - 1 to 1.2 kg/dm3)** that show the weight of the fertilizer to distribute in kg/ha [dN/Ha], and two coloured columns showing the adjustment of the VarioVolumex.

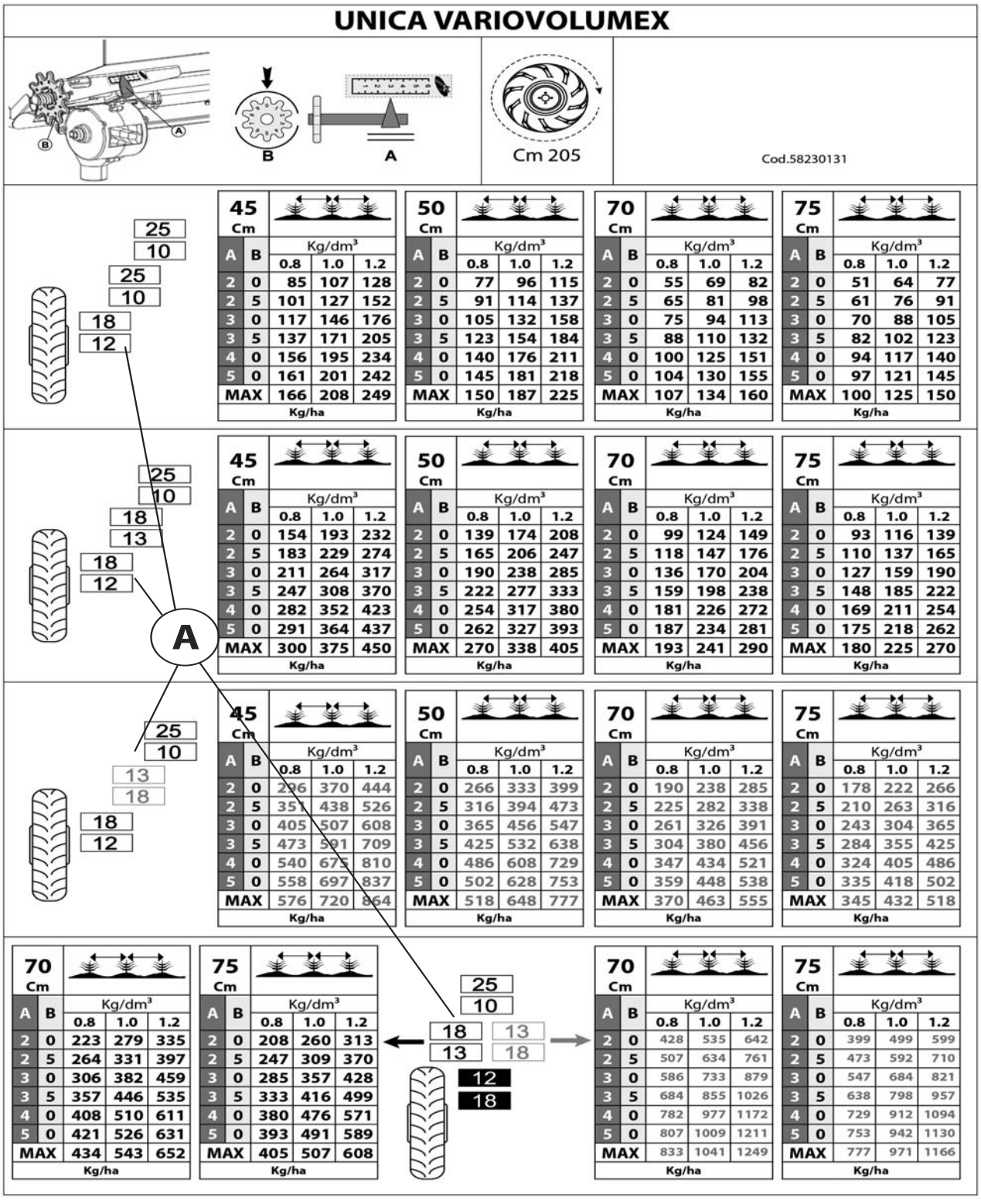

45 Cm — Kg/dm³

A	B	0.8	1.0	1.2
2	0	85	107	128
2	5	101	127	152
3	0	117	146	176
3	5	137	171	205
4	0	156	195	234
5	0	161	201	242
MAX		166	208	249

Kg/ha

50 Cm — Kg/dm³

A	B	0.8	1.0	1.2
2	0	77	96	115
2	5	91	114	137
3	0	105	132	158
3	5	123	154	184
4	0	140	176	211
5	0	145	181	218
MAX		150	187	225

Kg/ha

70 Cm — Kg/dm³

A	B	0.8	1.0	1.2
2	0	55	69	82
2	5	65	81	98
3	0	75	94	113
3	5	88	110	132
4	0	100	125	151
5	0	104	130	155
MAX		107	134	160

Kg/ha

75 Cm — Kg/dm³

A	B	0.8	1.0	1.2
2	0	51	64	77
2	5	61	76	91
3	0	70	88	105
3	5	82	102	123
4	0	94	117	140
5	0	97	121	145
MAX		100	125	150

Kg/ha

45 Cm — Kg/dm³

A	B	0.8	1.0	1.2
2	0	154	193	232
2	5	183	229	274
3	0	211	264	317
3	5	247	308	370
4	0	282	352	423
5	0	291	364	437
MAX		300	375	450

Kg/ha

50 Cm — Kg/dm³

A	B	0.8	1.0	1.2
2	0	139	174	208
2	5	165	206	247
3	0	190	238	285
3	5	222	277	333
4	0	254	317	380
5	0	262	327	393
MAX		270	338	405

Kg/ha

70 Cm — Kg/dm³

A	B	0.8	1.0	1.2
2	0	99	124	149
2	5	118	147	176
3	0	136	170	204
3	5	159	198	238
4	0	181	226	272
5	0	187	234	281
MAX		193	241	290

Kg/ha

75 Cm — Kg/dm³

A	B	0.8	1.0	1.2
2	0	93	116	139
2	5	110	137	165
3	0	127	159	190
3	5	148	185	222
4	0	169	211	254
5	0	175	218	262
MAX		180	225	270

Kg/ha

45 Cm — Kg/dm³

A	B	0.8	1.0	1.2
2	0	206	370	444
2	5	351	438	526
3	0	405	507	608
3	5	473	591	709
4	0	540	675	810
5	0	558	697	837
MAX		576	720	864

Kg/ha

50 Cm — Kg/dm³

A	B	0.8	1.0	1.2
2	0	266	333	399
2	5	316	394	473
3	0	365	456	547
3	5	425	532	638
4	0	486	608	729
5	0	502	628	753
MAX		518	648	777

Kg/ha

70 Cm — Kg/dm³

A	B	0.8	1.0	1.2
2	0	190	238	285
2	5	225	282	338
3	0	261	326	391
3	5	304	380	456
4	0	347	434	521
5	0	359	448	538
MAX		370	463	555

Kg/ha

75 Cm — Kg/dm³

A	B	0.8	1.0	1.2
2	0	178	222	266
2	5	210	263	316
3	0	243	304	365
3	5	284	355	425
4	0	324	405	486
5	0	335	418	502
MAX		345	432	518

Kg/ha

70 Cm — Kg/dm³

A	B	0.8	1.0	1.2
2	0	223	279	335
2	5	264	331	397
3	0	306	382	459
3	5	357	446	535
4	0	408	510	611
5	0	421	526	631
MAX		434	543	652

Kg/ha

75 Cm — Kg/dm³

A	B	0.8	1.0	1.2
2	0	208	260	313
2	5	247	309	370
3	0	285	357	428
3	5	333	416	499
4	0	380	476	571
5	0	393	491	589
MAX		405	507	608

Kg/ha

70 Cm — Kg/dm³

A	B	0.8	1.0	1.2
2	0	428	535	642
2	5	507	634	761
3	0	586	733	879
3	5	684	855	1026
4	0	782	977	1172
5	0	807	1009	1211
MAX		833	1041	1249

Kg/ha

75 Cm — Kg/dm³

A	B	0.8	1.0	1.2
2	0	399	499	599
2	5	473	592	710
3	0	547	684	821
3	5	638	798	957
4	0	729	912	1094
5	0	753	942	1130
MAX		777	971	1166

Kg/ha

Example 1 of table reading:

- Spacing between rows **75 cm**.
- Specific weight of the fertilizer **1 kg/dmc**.
- Choose the column corresponding to **1 kg/dmc** of specific weight (middle column).
- To distribute **100 kg/ha**.
- Look on the chosen column header (middle column) for the value closest to **100 kg/ha** which in this case is **102 kg/ha**, this value identifies a row which corresponds to the VarioVolumex adjustment (coloured columns) which in the example is **35**.

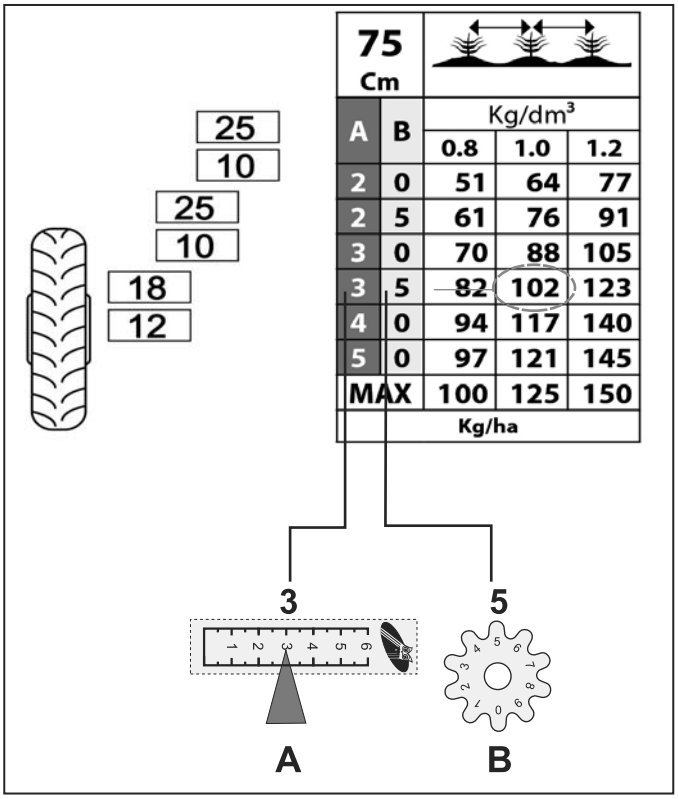

75 Cm		Kg/dm³		
A	B	0.8	1.0	1.2
2	0	51	64	77
2	5	61	76	91
3	0	70	88	105
3	5	82	102	123
4	0	94	117	140
5	0	97	121	145
MAX		100	125	150
Kg/ha				

Example 2 of table reading:

- Spacing between rows **75 cm.**
- Specific weight of the fertilizer **1 kg/dmc.**
- To distribute **400 kg/ha**.
- In this case, replace the second gear transmission **(10-25) with a gear (18-13).**
- Choose the column corresponding to **1 kg/dmc** of specific weight (middle column).
- Look on the chosen column header (middle column) for the value closest to **400 kg/ha which in this case is 405 kg/ha**, set the adjustment to **39 - 40.**

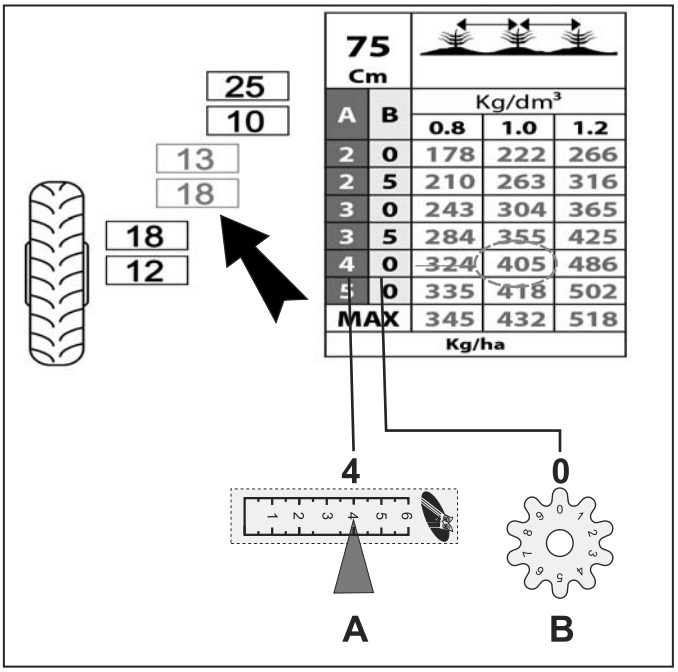

75 Cm		Kg/dm³		
A	B	0.8	1.0	1.2
2	0	178	222	266
2	5	210	263	316
3	0	243	304	365
3	5	284	355	425
4	0	324	405	486
5	0	335	418	502
MAX		345	432	518
Kg/ha				

Example 3 of table reading:

- Spacing between rows **75 cm.**
- Specific weight of the fertilizer **1 kg/dmc**.
- To distribute **900 kg/ha**.
- In this case, the first transmission gear must be set to **18-12** and the second gear to **18-13.**
- Choose the column corresponding to **1 kg/dmc** of specific weight (middle column).
- Look on the chosen column header (middle column) for the value closest to **900 kg/ha which in this case is 912 kg/ha**, set the adjustment to **38 - 39.**

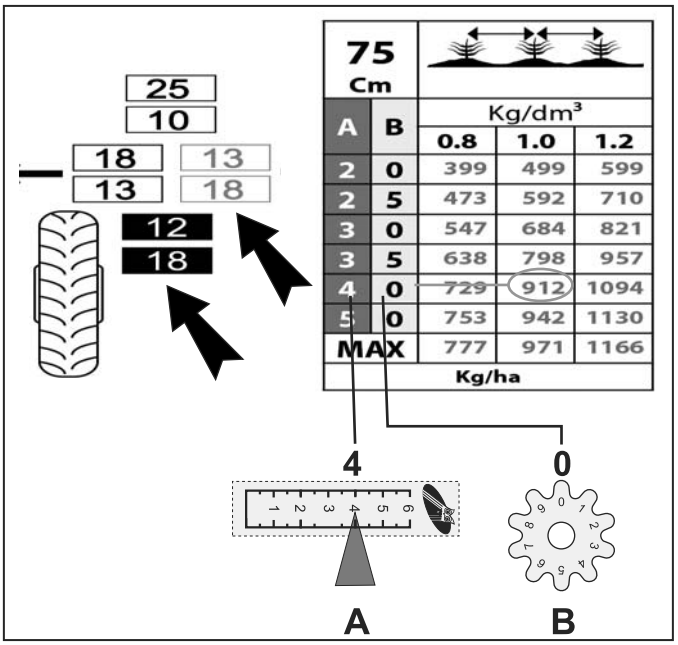

75 Cm		Kg/dm³		
A	B	0.8	1.0	1.2
2	0	399	499	599
2	5	473	592	710
3	0	547	684	821
3	5	638	798	957
4	0	729	912	1094
5	0	753	942	1130
MAX		777	971	1166
Kg/ha				

	In view of the variability of the physical state of the various fertilizers, the quantity of fertilizer actually distributed can be different from the one specified in the table. It is therefore absolutely necessary to check the quantity being distributed and if necessary correct the adjustment.

6. MAINTENANCE

In case of damage, the operator must stop the machine, take off the ignition key, jump off the tractor and determine the entity of the damage and then proceed to intervene on the machine.

Please note that all maintenance operations must be carried out by qualified and trained workers, when the machine is off.
It is also very important that all maintenance or repair interventions are not carried outside but in a specific equipped garage.

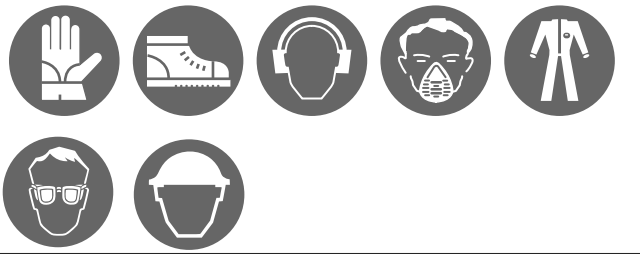

During the operations of use, regulation, maintenance, repair or movement, the operator must make use of the adequate Personal Protective Equipment.

Before starting all maintenance operation, the following instructions must be followed:

During the maintenance the machine must be placed on an even surface;

- During the maintenance the machine must be placed on an even surface;
- Turn off the engine of the tractor, pull the drum brake and take out the ignition key from the panel;
- Always make correct use of the Personal Protection Equipment (protective shoes, overall and gloves, mask);
- Use all the accident prevention means relative to the operation under way.
- Where using compressed air to clean the machine, you must use protective eye wear;
- When the maintenance of the machine requires to access parts that cannot be reached from standing on the ground, or points higher than 1,50 m, use a stairs or platforms in compliance with the in rule regulations;
- Do not carry out unfamiliar reparations. Always follow instructions and where they are missing, contact the manufacturer or expert personnel.
- Warning: replace the hydraulic pipes when these are damaged.
- Make sure that the lifting mean chosen is suitable for the operations to be carried out and is in compliance with the safety regulations;
- Do not keep the engine of the machine on in closed areas with no ventilation system able to eliminate the exhausting gases concentrating in the air;
- Avoid long and repeated skin contacts with fuels/lubricants/fluids, since these could generate inflammations or other skin pathologies;
- Do not ingest fuels/lubricants/fluids. In case of accidental contact with the eyes, carefully wash the area with water;
- Do not weld in closed areas or with an inappropriate ventilation;
- Do not weld on or besides painted surfaces to avoid the propagation of toxic fumes. Remove the paint with specific products, then wash the surface and let dry;
- When using compressed air, always wear goggles with side-protections, and mask in order to avoid the danger of personal lesions due to dust particles. It is preferred to clean the machine in ventilated areas.

6.1. MAINTENANCE INTERVENTIONS THATMAY BE CARRIED OUT BY THE OPERATOR

The interventions described in the following paragraphs do not require a technical specialization. The operator must know and accurately perform the indications and must have turned off the machine.
Periodical check-ups and maintenance operations must be carried out in the periods and modalities described and are at charge of the operator.
Not observing the periods and modalities of maintenance will endanger the correct functioning of the machine, thus breaking the warranty validity.
Intensify the frequency of maintenance interventions in case of hard use (frequent arrests and start-ups, very hard soils, etc..).

- Regularly check that the signs and safety disposals on the machine are in good state and that nothing endangers their correct functioning.
- Regularly check the condition of painted and galvanized parts of the seeder. Avoid leaving residues from chemical products on the machine.
- Regularly paint all of the parts for joining and fixing (rods, screws, nuts, etc…) also inspect that these are well tight and correctly positioned. Do not use the machine in the instance where fixtures are not in order or correctly attached.
- The sowing machine was mounted with most of the movements built on auto-lubricant bushings, only the transmission chains and some pins need to be periodically greased (distribute a thin layer of grease on the rollers and on the gear units). In case there is a fertilizer spreader mounted on the machine, periodically grease the roller chains and the gear units of the mechanical operation.

- Immediately clean all fertilizer or other chemical/biological product fell on the frame or on the fixing U-bolts in the respect of all the safety regulations supplied at the purchase of this product.

6.2. GREASING

Using a designated greasing pump, grease the points indicated by the symbols:

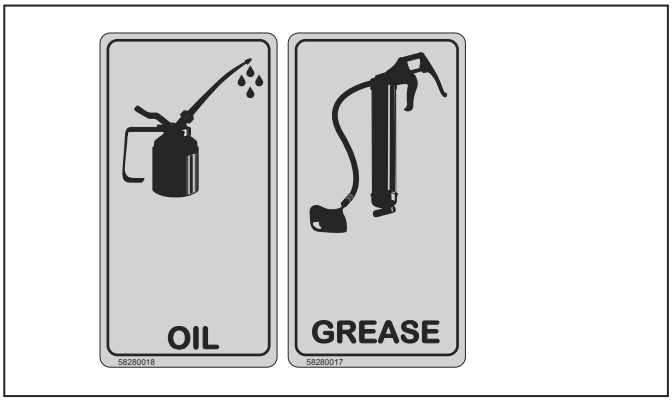

Only use a manual greasing pump so as to avoid breaking the bearing seals and the grease pipes.

6.3. FINTERVENTIONS FREQUENCY

This paragraph contains information on the periods of interventions for some of the operations to be performer to maintain the perfect functioning of the soling machine. The frequency listed is purely informative and may be different on the base of the use, environment, seasonal matters, etc…

NEW MACHINE

- Control the tightening of all the screws and nuts, control that all the transmissions are free to operate.

START OF THE SOWING SEASON

- Check the state of use of the equipment by starting the machine on unloaded.

DAILY

- Wash with water the soling machine, especially those parts in contact with the chemical products like tanks, distributors, distribution pipes.
- Control that there is no residuals of chemical products inside the distribution parts since these may cause blocks and/or malfunctioning.

WEEKLY

- Verify the state of the transmissions;

RESTING PERIOD

- At the end of the season, or in case of a long period of unused, it is suggested to:
- Wash the equipment abundantly with water and in particular the tanks of chemical products and then let dry.
- Control all of the parts carefully and replace when damaged or old.
- Tighten up all screws and nuts.
- Oil the Easy-set guide, all of the transmission chains, lubricate all the non-painted parts.
- Protect the equipment with a cloth and put in a dry and stable area, outside of the reach of unauthorized personnel.
- Maintain clean from materials that may obstacle the sowing parts like dirt, rocks or roots, grass, etc… and that may cause the obstruction of the sowing tool, the malfunctioning of the anti-plough disk or the blocking of the compression wheels.
- Performing these simple operations will be very advantageous since at the start of a new season the equipment will be in perfect conditions.

6.4. SPARE PARTS

Repair work and part replacement should be carried out using original spare parts requested from an authorised dealer. It is important to remember that any request for spare parts should be accompanied by the following information:

- **machine type;**
- **machine serial number;**
- **spare part item code available from the Spare parts catalogue.**

The use of spare parts not approved by the Manufacturer invalidates every guarantee and releases the Manufacturer or Dealer from every liability due to malfunctioning or incidents.
The removal or modification of the guards and protections releases the Manufacturer from every liability due to damage to things and/or people.

ARBOS

CE

IT Dichiarazione di Conformità CE Sarchiatrice.
La Ditta MATERMACC S.p.A. dichiara sotto la propria responsabilità che la macchina è conforme ai requisiti di sicurezza e salute previsti dalla Direttiva Europea: **2006/42/CE - 2014/30/UE** (Compatibilità elettromagnetica) - Per modelli di macchine equipaggiate con dispositivi elettrici/elettronici.
Per l'adeguamento della macchina sono state utilizzate le seguenti Norme Armonizzate: **UNI EN ISO 4254-1:2015, UNI EN 14018:2010** nonché le specifiche tecniche: **ISO 11684 1995**.

PT Declaração de conformidade CE Sachador.
A Empresa MATERMACC S.p.A. declara sob a sua responsabilidade que a máquina cumpre com os requisitos de segurança e saúde estabelecidos na Diretiva Europeia: **2006/42/CE - 2014/30/UE** (Compatibilidade eletromagnética) - Para modelos de máquinas equipadas com dispositivos elétricos/eletrónicos.
Para a adequação da máquina foram utilizadas as seguintes Normas Harmonizadas: **EN ISO 4254-1:2015, EN 14018:2010** bem como as especificações técnicas: **ISO 11684 1995**.

HU Kapálógép EK Megfelelőségi nyilatkozat.
A MATERMACC S.p.A. cég saját felelőssége tudatában kijelenti, hogy a gép megfelel az alábbi Európai Irányelvek biztonsági és egészségügyi előírásainak: **2006/42/EK - 2014/30/EU** (Elektromágneses megfelelőség) - Az elektromos/elektronikus készülékekkel felszerelt gépmodelleknél.
A gép beigazításához az alábbi Harmonizált Szabványokat: **UNI EN ISO 4254-1:2015, UNI EN 14018:2010** valamint műszaki specifikációkat használták: **ISO 11684 1995**.

EN Cultivator EC Declaration of Conformity.
MATERMACC S.p.A. declares under its sole responsibility that the machinery is compliant with the health and safety requirements of European Directives: **2006/42/EC - 2014/30/EU** (Electromagnetic compatibility) - For models of machines with electrical or electronic apparatus.
For machinery compliance, the following harmonised standards have been used: **UNI EN ISO 4254-1:2015, UNI EN 14018:2010** as well as the technical specifications: **ISO 11684 1995**.

RU Декларация о соответствии ЕС междурядного пропалывателя.
Компания MATERMACC S.p.A. заявляет под собственной ответственностью, что машина соответствует требованиям техники безопасности и охраны труда, предусмотренным Европейской Директивой: **2006/42/CE - 2014/30/UE** (Электромагнитная совместимость) - Для моделей машин, оснащенных электрическими/электронными устройствами.
Для обеспечения соответствия машины были использованы следующие соответствующие нормы: **UNI EN ISO 4254-1:2015, UNI EN 14018:2010,** а также технические условия: **ISO 11684 1995**.

LT Ravėtuvo EB atitikties deklaracija
Bendrovė „MATERMACC S.p.A." atsakingai pareiškia, kad mašina atitinka saugos ir sveikatos reikalavimus, nustatytus ES direktyvose **2006/42/EB, 2014/30/ES** (Elektromagnetinio suderinamumo direktyva – taikoma mašinų modeliams, kuriuose yra elektrinių ar elektroninių įtaisų).
Mašiną pritaikant vadovautasi toliau išvardytais darniaisiais standartais: **UNI EN ISO 4254-1:2015, UNI EN 14018:2010** ir techninėmis specifikacijomis: **ISO 11684 1995.**

FR Déclaration de conformité CE Bineuse.
La société MATERMACC S.p.A. déclare sous sa propre responsabilité que la machine est conforme aux exigences de sécurité et de santé prévues par la directive européenne : **2006/42/CE - 2014/30/UE** (Compatibilité électromagnétique) - Pour les modèles de machine équipés de dispositifs électriques/électroniques.
Pour l'ajustement de la machine, les normes harmonisées suivantes ont été utilisées : **UNI EN ISO 4254-1:2015, UNI EN 14018:2010** ainsi que les caractéristiques techniques : **ISO 11684 1995**.

PL Deklaracja zgodności CE Chwastownika.
Firma MATERMACC S.p.A. oświadcza na własną odpowiedzialność, że maszyna spełnia wymagania w zakresie bezpieczeństwa i ochrony zdrowia określone w dyrektywie europejskiej: **2006/42/WE - 2014/30/UE** (Kompatybilność elektromagnetyczna) - Dla modeli maszyn wyposażonych w urządzenia elektryczne/elektroniczne.
W celu dostosowania maszyny zastosowano następujące Normy Zharmonizowane: **UNI EN ISO 4254-1:2015, UNI EN 14018:2010** oraz specyfikacje techniczne: **ISO 11684 1995**.

BG Декларация за съответствие CE Машина за плевене.
Фирмата MATERMACC S.p.A. декларира на своя собствена отговорност, че машината съответства на изискванията за безопасност и здраве, предвидени от Европейската Директива: **2006/42/CE - 2014/30/UE** (Електромагнитна съвместимост) - За модели на машини, оборудвани с електрически/електронни устройства.
За приспособяване на машината са прилагани следните Хармонизирани Стандарти: **UNI EN ISO 4254-1:2015, UNI EN 14018:2010** както и техническите спецификации: **ISO 11684 1995**.

DE EG-Konformitätserklärung Hackmaschine
Die Firma Matermacc S.p.A erklärt auf eigene Verantwortung, dass die Maschine mit den Sicherheits- und Gesundheitsschutzanforderungen der folgenden europäischen Richtlinie konform ist: **2006/42/EG - 2014/30/EU** (Elektromagnetische Verträglichkeit) - für Maschinenmodelle, die mit elektrischen/elektronischen Geräten ausgestattet sind.
Für die Anpassung der Maschine wurden die folgenden harmonisierten Normen verwendet: **UNI EN ISO 4254-1:2015, UNI EN 14018:2010** sowie die folgende technische Spezifikation: **ISO 11684 1995**.

CZ Prohlášení o shodě ES Plečka.
Společnost MATERMACC S.p.A prohlašuje na vlastní odpovědnost, že strojní zařízení splňuje požadavky na bezpečnost a ochranu zdraví dle Evropské směrnice: **2006/42/ES - 2014/30/EU** (Elektromagnetická kompatibilita) – Pro modely strojů vybavených elektrickými/elektronickými zařízeními.
Pro přizpůsobení strojního zařízení byly použity následující harmonizované normy: **ČSN EN ISO 4254-1:2015, ČSN EN 14018:2010** a technické specifikace: **ISO 11684 1995**.

RO Declarație de Conformitate CE Mașină de Plivit.
Compania MATERMACC S.p.A. declară pe proprie răspundere că utilajul este în conformitate cu cerințele de siguranță și sănătate prevăzute de Directiva Europeană: **2006/42/CE - 2014/30/UE** (Compatibilitate electromagnetică) - Pentru modele de utilaje echipate cu dispozitive electrice/electronice.
Pentru adecvarea utilajului s-au utilizat următoarele Standarde Armonizate: **UNI EN ISO 4254-1:2015, UNI EN 14018:2010** cât și specificațiile tehnice: **ISO 11684 1995**.

ES Declaración CE de conformidad para cavadora.
La empresa MATERMACC S.p.A declara bajo su propia responsabilidad que la máquina es conforme a los requisitos de seguridad y salud establecidos por la Directiva europea: **2006/42/CE - 2014/30/UE** (Compatibilidad electromagnética) - Para modelos de máquinas equipadas con dispositivos eléctricos/electrónicos.
Para la adaptación de la máquina se han utilizado las siguientes normas armonizadas: **UNI EN ISO 4254-1:2015, UNI EN 14018:2010** así como las especificaciones técnicas: **ISO 11684 1995**.

SK Vyhlásenie o zhode ES Plečka.
Spoločnosť MATERMACC S.p.A vyhlasuje na vlastnú zodpovednosť, že strojové zariadenie spĺňa požiadavky na bezpečnosť a ochranu zdravia podľa Európskej smernice: **2006/42/ES - 2014/30/EÚ** (Elektromagnetická kompatibilita) – Pre modely strojov vybavených elektrickými/elektronickými zariadeniami.
Pre prispôsobenie strojového zariadenia boli použité nasledujúce harmonizované normy: **STN EN ISO 4254-1:2015, STN EN 14018:2010** a technické špecifikácie: **ISO 11684 1995**.

EL Δήλωση Συμμόρφωσης ΕΚ Καλλιεργητή.
Η Εταιρία MATERMACC S.p.A. δηλώνει υπεύθυνα ότι η μηχανή είναι συμβατή με τις απαιτήσεις σχετικά με την ασφάλεια και την υγεία που προβλέπονται από την Ευρωπαϊκή Οδηγία: **2006/42/EK - 2014/30/EE** (Ηλεκτρομαγνητική συμβατότητα) - Για μοντέλα μηχανών εξοπλισμένων με ηλεκτρικές/ηλεκτρονικές διατάξεις.
Για την προσαρμογή της μηχανής έχουν χρησιμοποιηθεί τα ακόλουθα Εναρμονισμένα Πρότυπα: **UNI EN ISO 4254-1:2015, UNI EN 14018:2010** καθώς και οι τεχνικές προδιαγραφές: **ISO 11684 1995**.

Tipo/Type	Matricola/ Identification number
Modello/Model	Anno/Year
Serie/Series	Data/Date

Il rappresentante
The representative
Andrea Bedosti

Depositario della Documentazione. La presente Dichiarazione è stata redata nella sede MATERMACC in Via Gemona 18 San Vito al Tagliamento (PN) Tel. e Fax 0434/85267 - 0434/85517
Documentation deposited by. This declaration was drawn up at the office of MATERMACC at Via Gemona 18, San Vito al Tagliamento (PN), Italy Tel. and fax (+39) 0434 85267 - (+39) 0434 85517

ARBOS

Matermacc S.p.A.
Via Gemona, 18 - 33078 San Vito al Tagliamento
(PN) ITALIA
Phone + 39 0434 85267 Fax.+ 39 0434 85517